EXPLODED VIEW

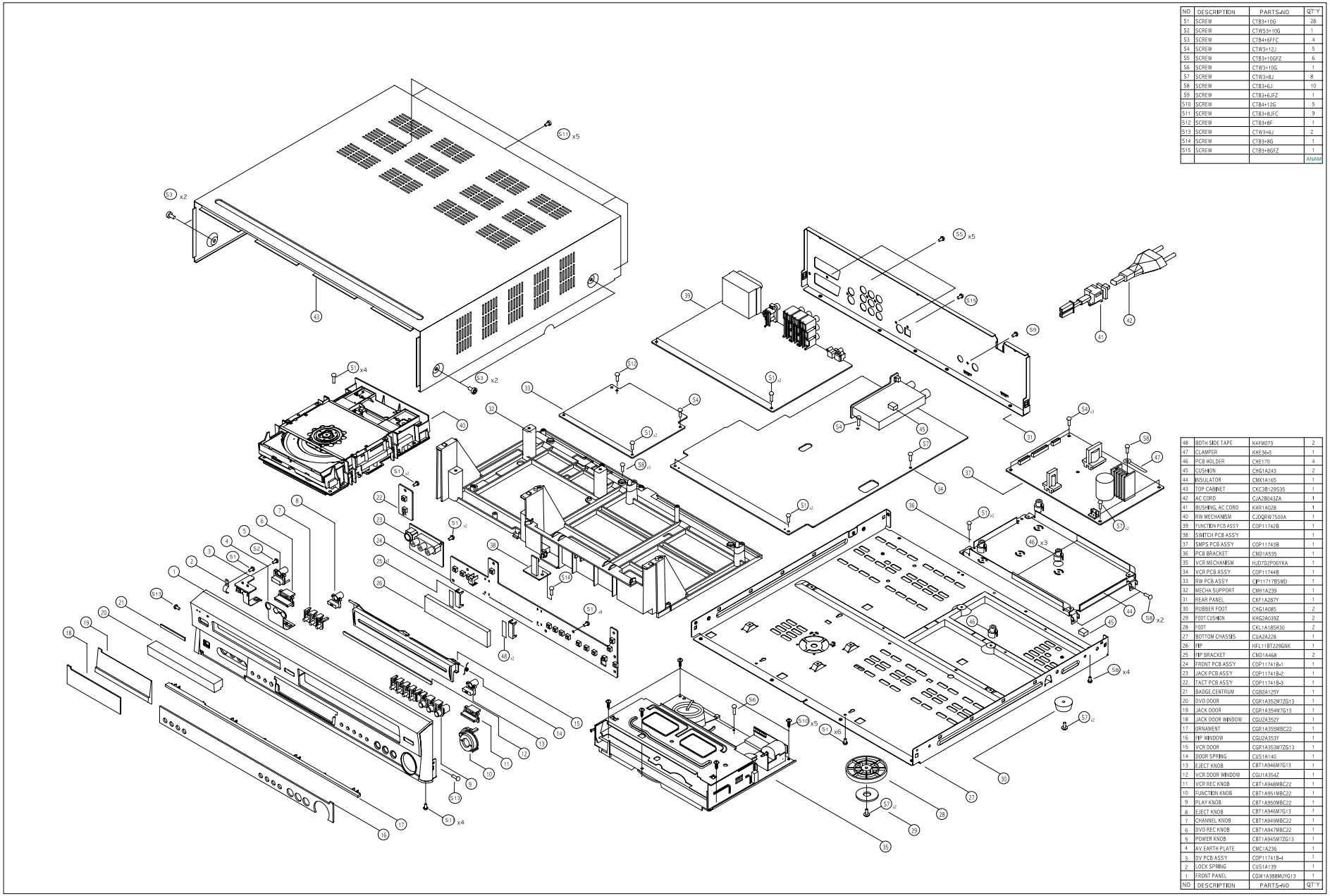

NO	DESCRIPTION	PARTS-NO	QT'Y
S1	SCREW	CTB3+10G	28
S2	SCREW	CTW5S+10G	1
S3	SCREW	CTB4+6FFC	4
S4	SCREW	CTW3+12J	5
S5	SCREW	CTB3+10GFZ	6
S6	SCREW	CTW3+10G	1
S7	SCREW	CTW3+8J	8
S8	SCREW	CTB3+6J	10
S9	SCREW	CTB3+6JFZ	1
S10	SCREW	CTB4+12G	5
S11	SCREW	CTB3+8JFC	9
S12	SCREW	CTB3+8F	1
S13	SCREW	CTW3+6J	2
S14	SCREW	CTB3+8G	1
S15	SCREW	CTB3+8GFZ	1
			ANAM

48	BOTH SIDE TAPE	K4FM073	2
47	CLAMPER	KHE36-3	1
46	PCB HOLDER	CHE170	4
45	CUSHION	CHG1A243	2
44	INSULATOR	CMX1A165	1
43	TOP CABINET	CKC3B1295S35	1
42	AC CORD	CJA2B043ZA	1
41	BUSHING, AC CORD	KHR1A028	1
40	RW MECHANISM	CJDQRW7500A	1
39	FUNCTION PCB ASSY	CDP11742B	1
38	SWITCH PCB ASSY		1
37	SMPS PCB ASSY	CDP11743B	1
36	PCB BRACKET	CMD1A535	1
35	VCR MECHANISM	HJDT32P06YKA	1
34	VCR PCB ASSY	CDP11744B	1
33	RW PCB ASSY	CDP11717B5MD	1
32	MECHA SUPPORT	CMH1A239	1
31	REAR PANEL	CKF1A287Y	1
30	RUBBER FOOT	CHG1A085	2
29	FOOT CUSHION	CHG2A039Z	2
28	FOOT	CKL1A185H30	2
27	BOTTOM CHASSIS	CUA2A228	1
26	FIP	HFL11BT229GNK	1
25	FIP BRACKET	CMD1A468	2
24	FRONT PCB ASSY	CDP11741B-1	1
23	JACK PCB ASSY	CDP11741B-2	1
22	TACT PCB ASSY	CDP11741B-3	1
21	BADGE,CENTRUM	CGB2A125Y	1
20	DVD DOOR	CGR1A352M7ZG13	1
19	JACK DOOR	CGR1A354M7G13	1
18	JACK DOOR WINDOW	CGU2A352Y	1
17	ORNAMENT	CGR1A355MBC22	1
16	FIP WINDOW	CGU2A353Y	1
15	VCR DOOR	CGR1A353M7ZG13	1
14	DOOR SPRING	CUS1A140	1
13	EJECT KNOB	CBT1A946M7G13	1
12	VCR DOOR WINDOW	CGU1A354Z	1
11	VCR REC KNOB	CBT1A948MBC22	1
10	FUNCTION KNOB	CBT1A951MBC22	1
9	PLAY KNOB	CBT1A950MBC22	1
8	EJECT KNOB	CBT1A946M7G13	1
7	CHANNEL KNOB	CBT1A949MBC22	1
6	DVD REC KNOB	CBT1A947MBC22	1
5	POWER KNOB	CBT1A945M7ZG13	1
4	AV EARTH PLATE	CMC1A236	1
3	DV PCB ASSY	CDP11741B-4	1
2	LOCK SPRING	CUS1A139	1
1	FRONT PANEL	CGW1A388MUYG13	1
NO	DESCRIPTION	PARTS-NO	QT'Y

HJDQRW7500(DVD RW MECHANISM) EXPLODED VIEW

PART NO.	REV	SYMBOL	DESCRIPTION	LOCATED	REASON	SIGN	DATE
99.B4015.003	A		Assy Drawing		For reference	Owen	5/28'04

No.	DESCRIPTION
1	Screw
2	Clamper Bridge Assy
3	Gear Assy
4	Chassis Assy
5	Tray
6	PCBA Front
7	Motor
8	Base Plate
9	PCBA Main
10	CDM Assy

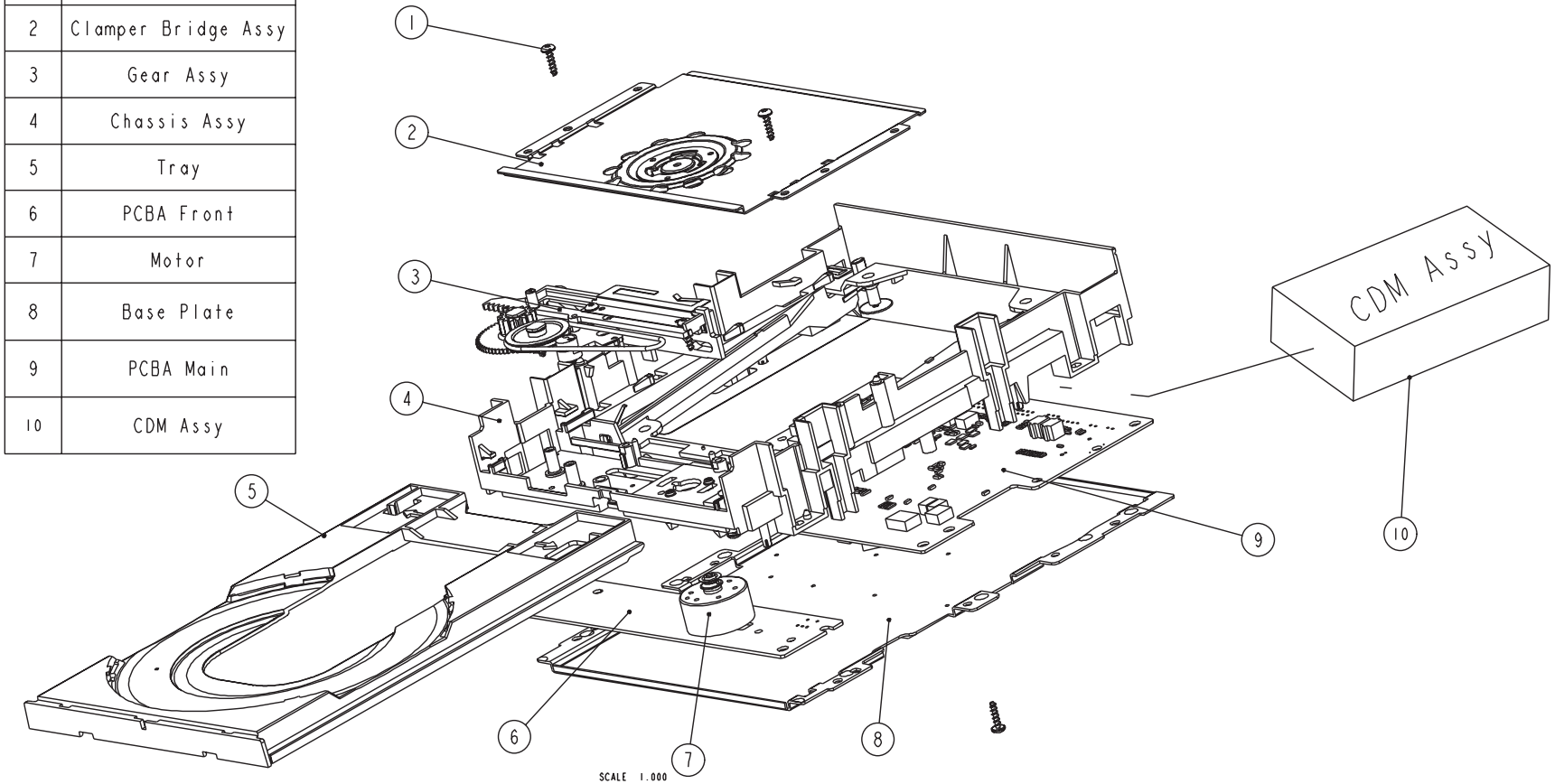

MODEL	DF1		NAME	Assy Drawing		
DRN	Owen	5/28'04	MATERIAL			
DSN	Owen	5/28'04	FINISH			
CKD	Edward	5/28'04	SCALE	1/1	DIM IN	mm
APPD	Edward	5/28'04	SHEET	1 OF 1	CAVITIES	

Benq Corporation

TOLERANCE UNLESS OTHERWISE SPECIFIED (±)

CLASS	A	B	C	D	E	F	G
< 8mm	0.05	0.1	0.1	0.2	0.2	0.4	0.4
8~25mm	0.08	0.15	0.15	0.3	0.3	0.6	0.6
25~80mm	0.12	0.2	0.25	0.4	0.5	0.8	1.0
80~250mm	0.25	0.3	0.4	0.6	0.8	1.2	1.5
250~800mm	0.5	0.6	0.8	1.0	1.5	2.0	3.0
>800mm	1.0	1.0	1.05	1.7	3.0	4.0	6.0
ANGLE	0.5						

FILE NAME	DF1_Assy_A
PART NO	99.B4015.003

BLOCK DIAGRAM

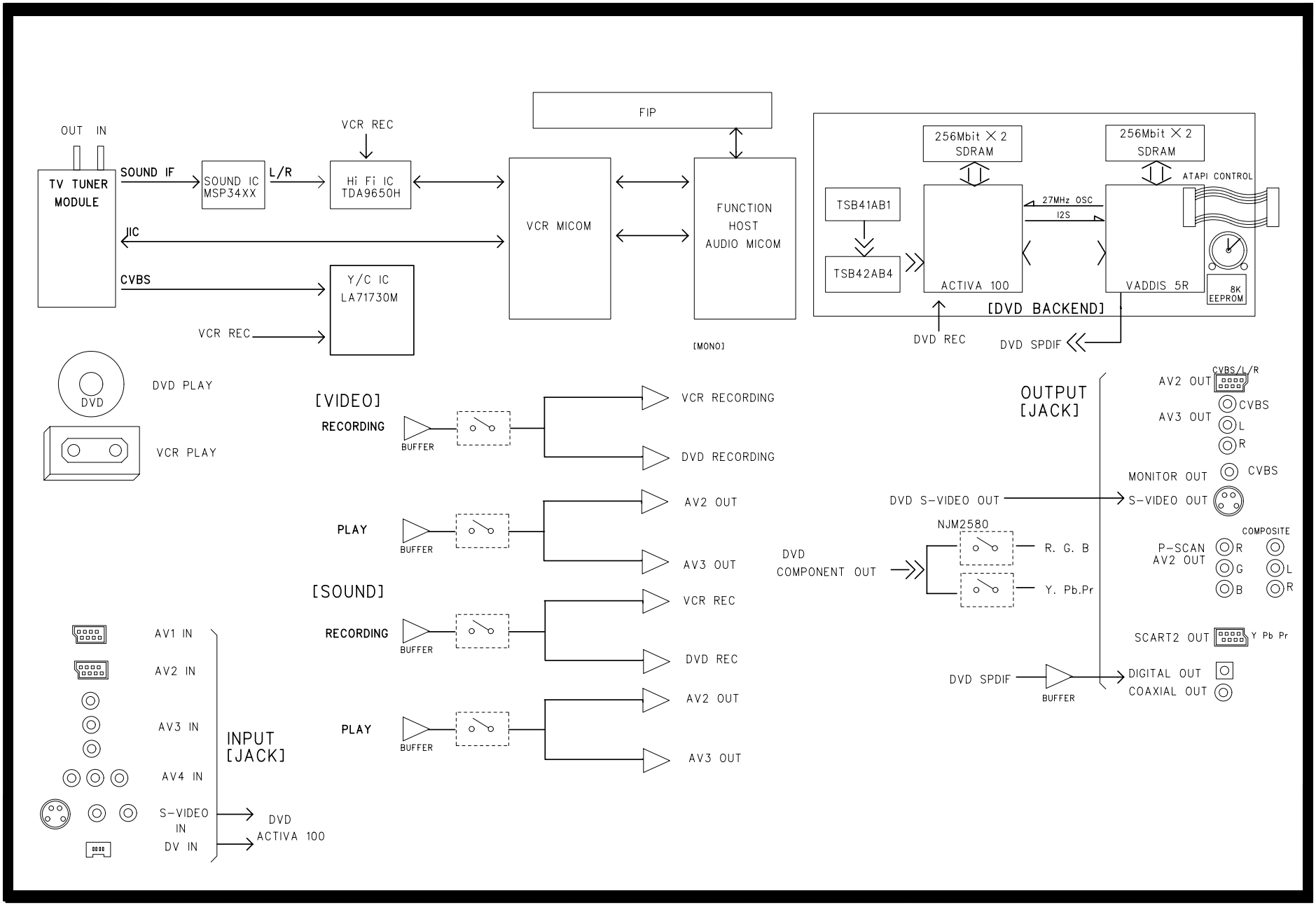

WIRING DIAGRAM

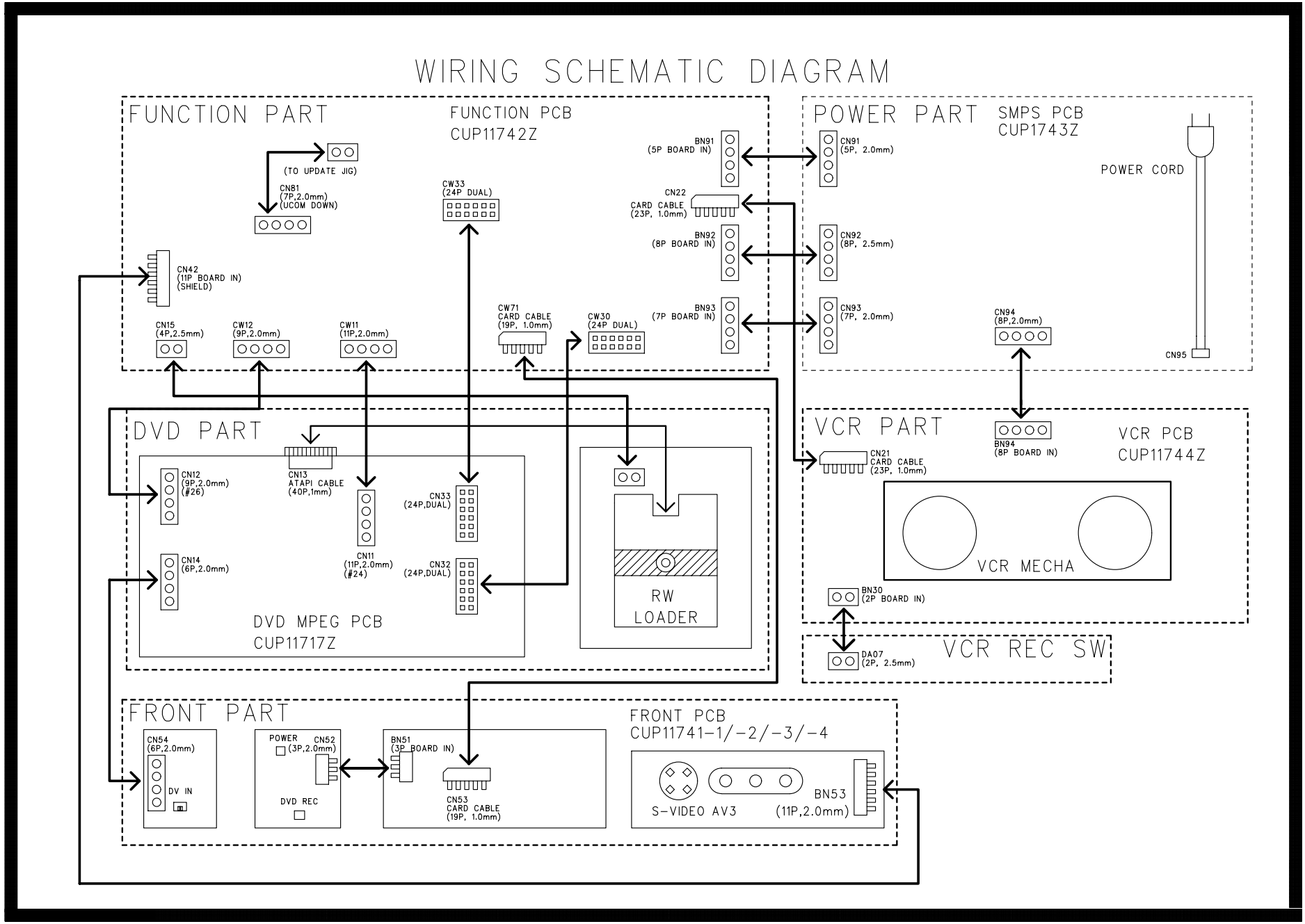

SCHEMATIC DIAGRAMS
FRONT BOARD

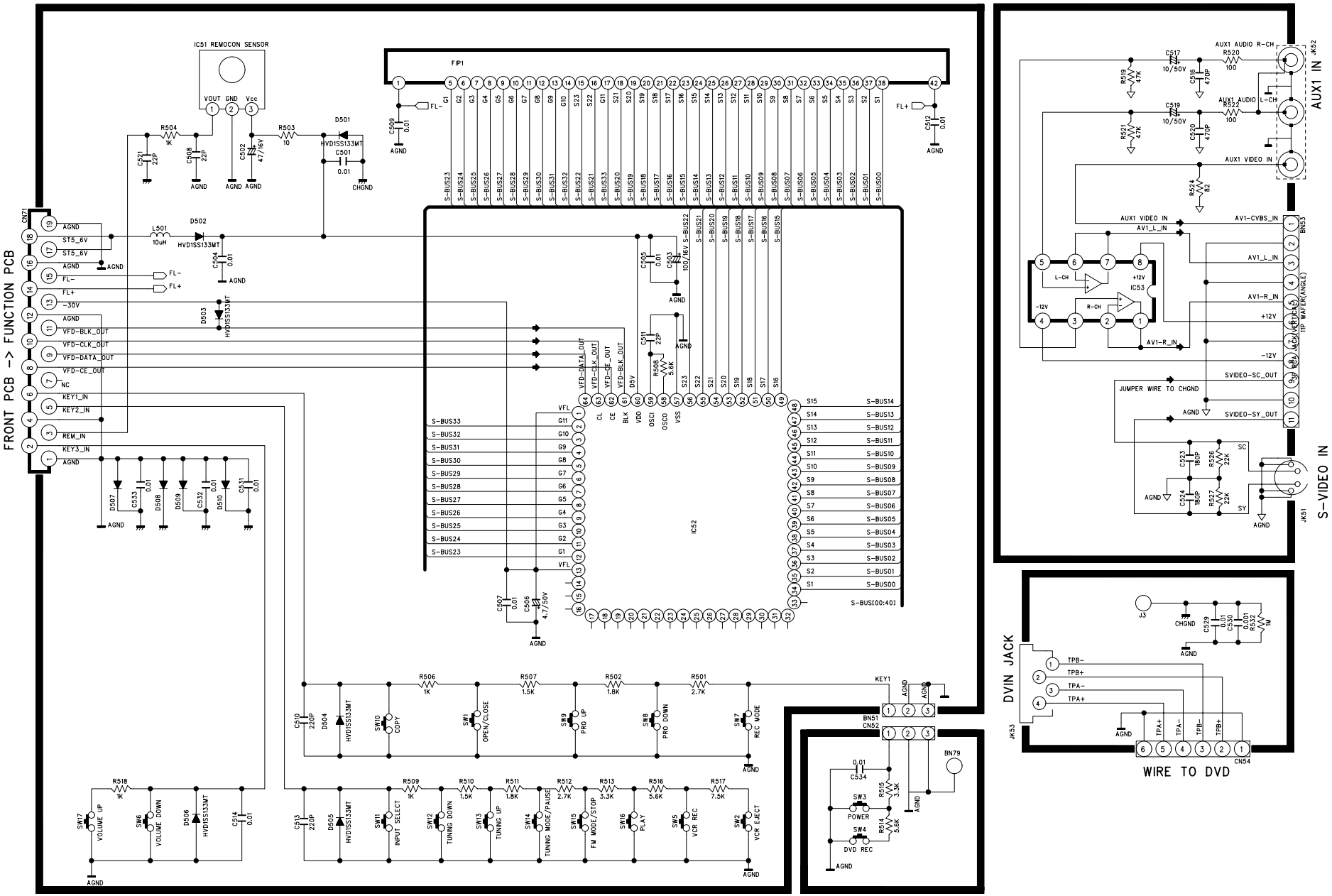

FUNCTION BOARD 1

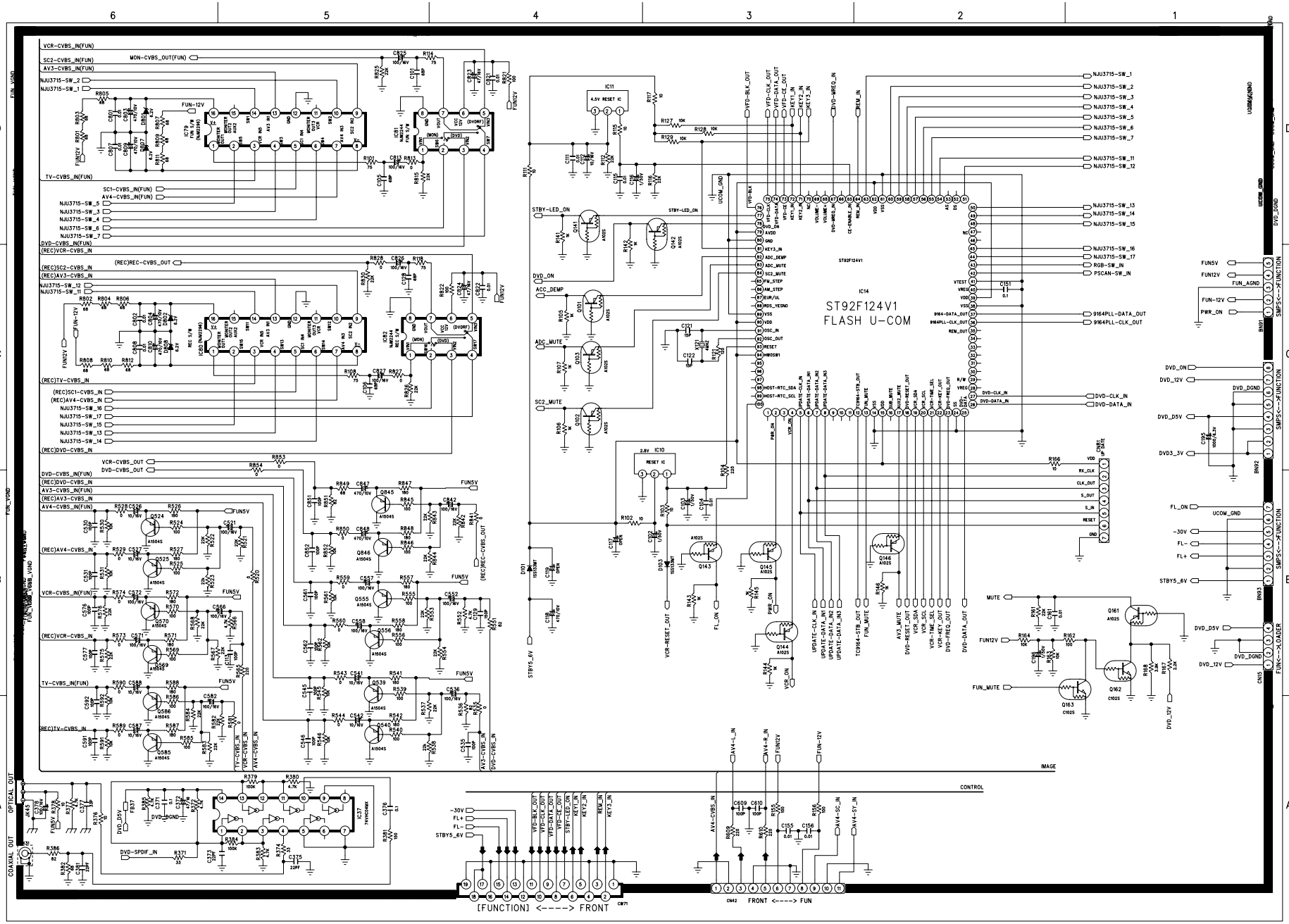

FUNCTION BOARD 2

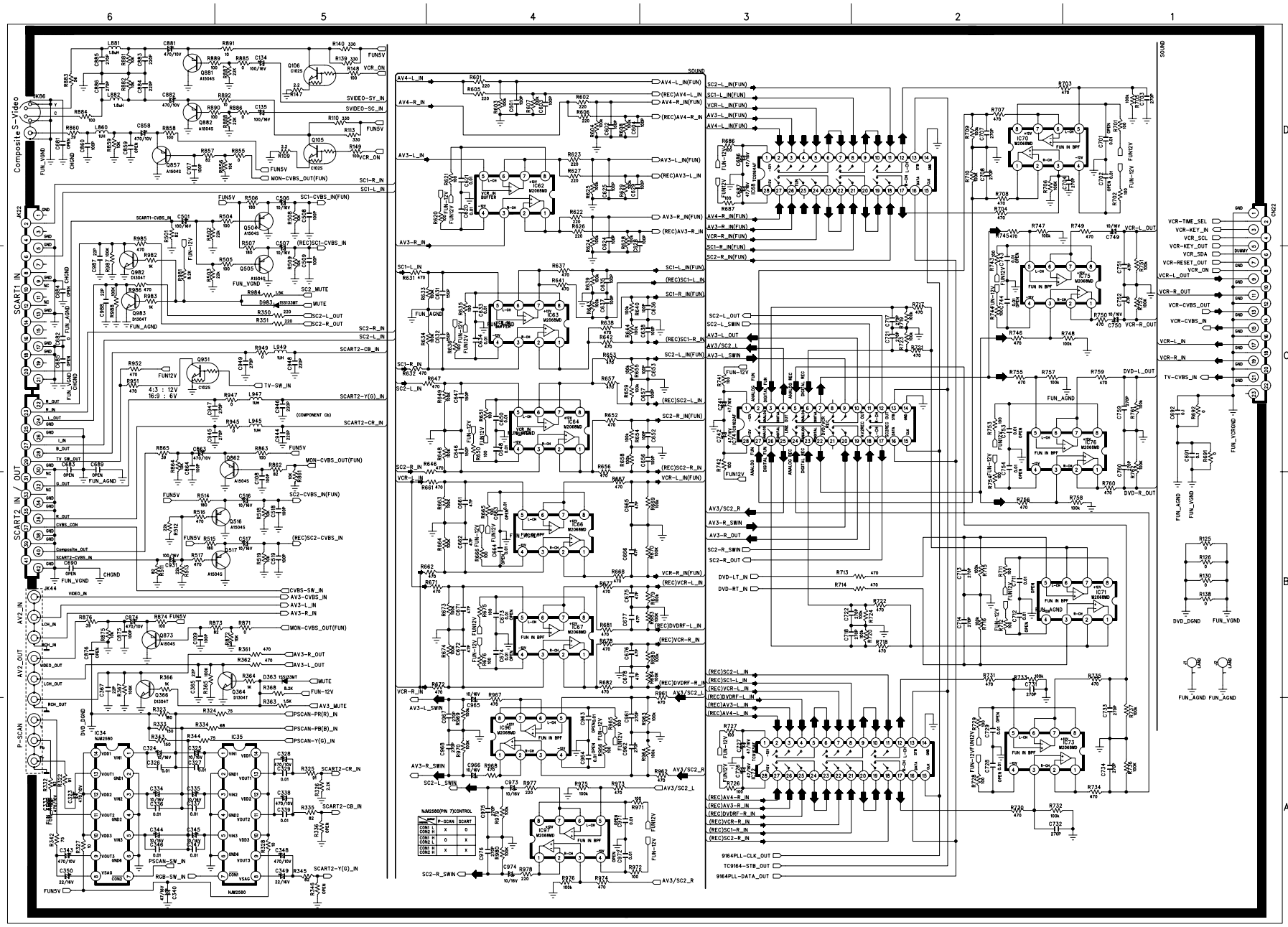

FUNCTION BOARD 3

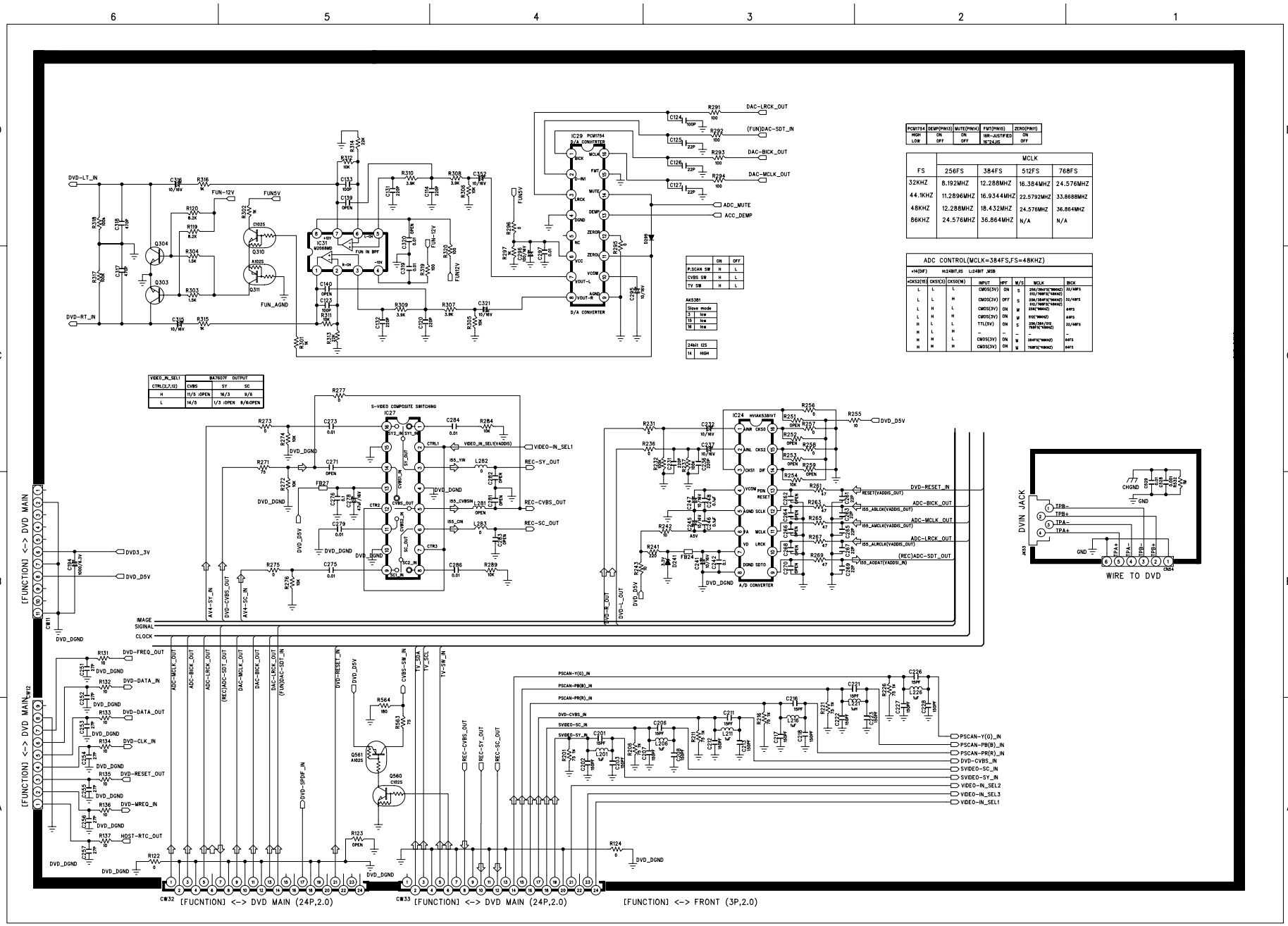

PCM1754	DEMP(PIN13)	MUTE(PIN14)	FMT(PIN15)	ZERO(PIN11)
HIGH	ON	ON	16R-JUSTIFIED	ON
LOW	OFF	OFF	16~24JIS	OFF

FS	MCLK			
	256FS	384FS	512FS	768FS
32KHZ	8.192MHZ	12.288MHZ	16.384MHZ	24.576MHZ
44.1KHZ	11.2896MHZ	16.9344MHZ	22.5792MHZ	33.8688MHZ
48KHZ	12.288MHZ	18.432MHZ	24.576MHZ	36.864MHZ
86KHZ	24.576MHZ	36.864MHZ	N/A	N/A

	ON	OFF
P.SCAN SW	H	L
CVBS SW	H	L
TV SW	H	L

AK5381

Slave mode	
3	low
15	low
16	low

24bit I2S

14	HIGH

ADC CONTROL(MCLK=384FS,FS=48KHZ)

+14(DIF) H=24BIT,I2S L=24BIT ,MSB

+CKS2(15)	CKS1(3)	CKS0(16)	INPUT	HPF	M/S	MCLK	BICK
L	L	L	CMOS(3V)	ON	S	256/384FS(*96KHZ) 512/768FS(*48KHZ)	32/48FS
L	L	H	CMOS(3V)	OFF	S	256/384FS(*96KHZ) 512/768FS(*48KHZ)	32/48FS
L	H	L	CMOS(3V)	ON	M	256(*96KHZ)	64FS
L	H	H	CMOS(3V)	ON	M	512(*96KHZ)	64FS
H	L	L	TTL(5V)	ON	S	256/384/512 768FS(*48KHZ)	32/48FS
H	L	H	-	-	-	-	-
H	H	L	CMOS(3V)	ON	M	384FS(*96KHZ)	64FS
H	H	H	CMOS(3V)	ON	M	768FS(*48KHZ)	64FS

VIDEO_IN_SEL1	BA7607F OUTPUT		
CTRL(2,7,12)	CVBS	SY	SC
H	11/5 :OPEN	16/3	9/6
L	14/5	1/3 :OPEN	8/6:OPEN

POWER BOARD

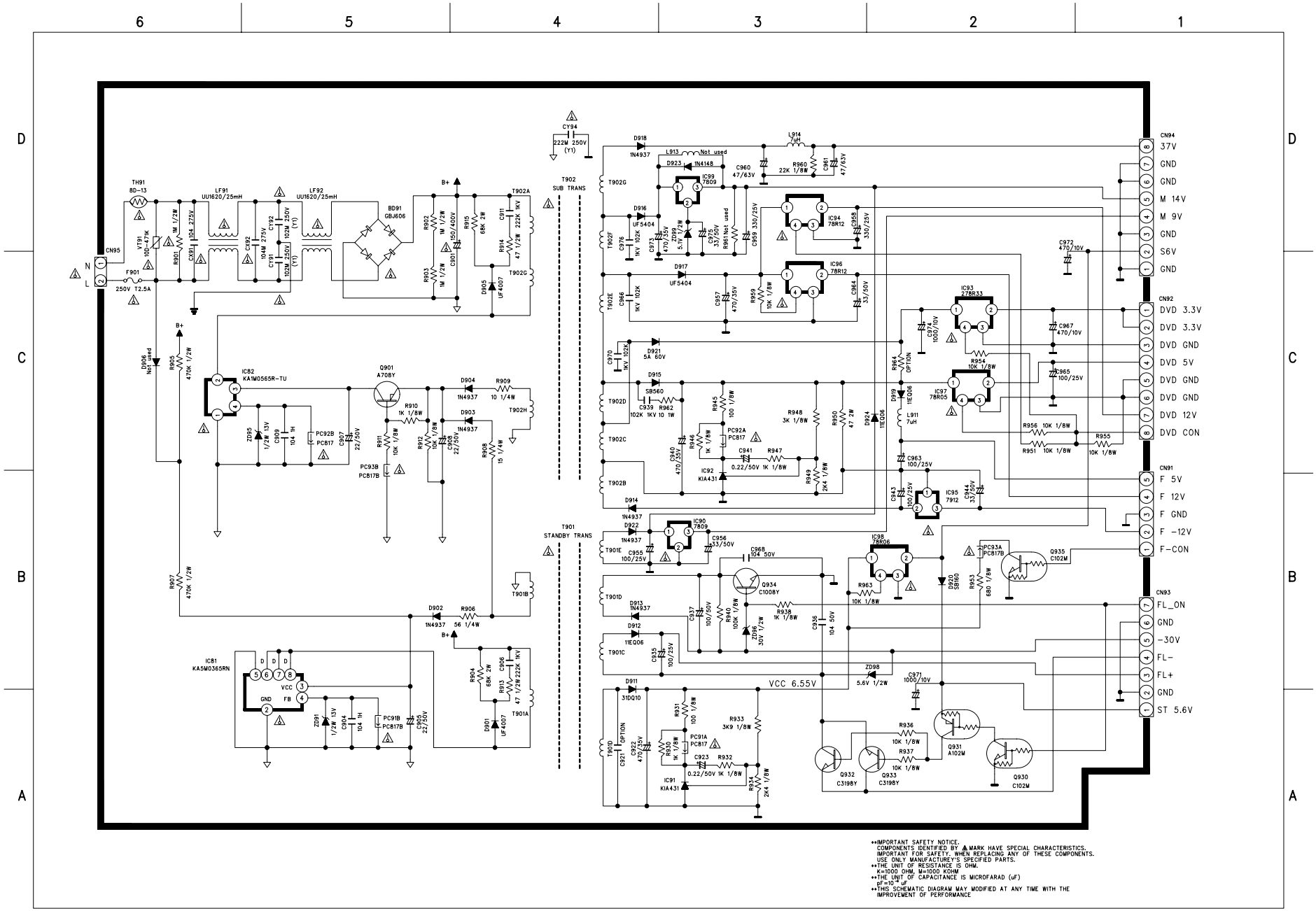

**IMPORTANT SAFETY NOTICE.
COMPONENTS IDENTIFIED BY ⚠ MARK HAVE SPECIAL CHARACTERISTICS.
IMPORTANT FOR SAFETY. WHEN REPLACING ANY OF THESE COMPONENTS.
USE ONLY MANUFACTUREY'S SPECIFIED PARTS.
**THE UNIT OF RESISTANCE IS OHM.
K=1000 OHM, M=1000 KOHM
**THE UNIT OF CAPACITANCE IS MICROFARAD (uF)
pF=10^{-6} uF
**THIS SCHEMATIC DIAGRAM MAY MODIFIED AT ANY TIME WITH THE
IMPROVEMENT OF PERFORMANCE

RW MAIN BOARD 1

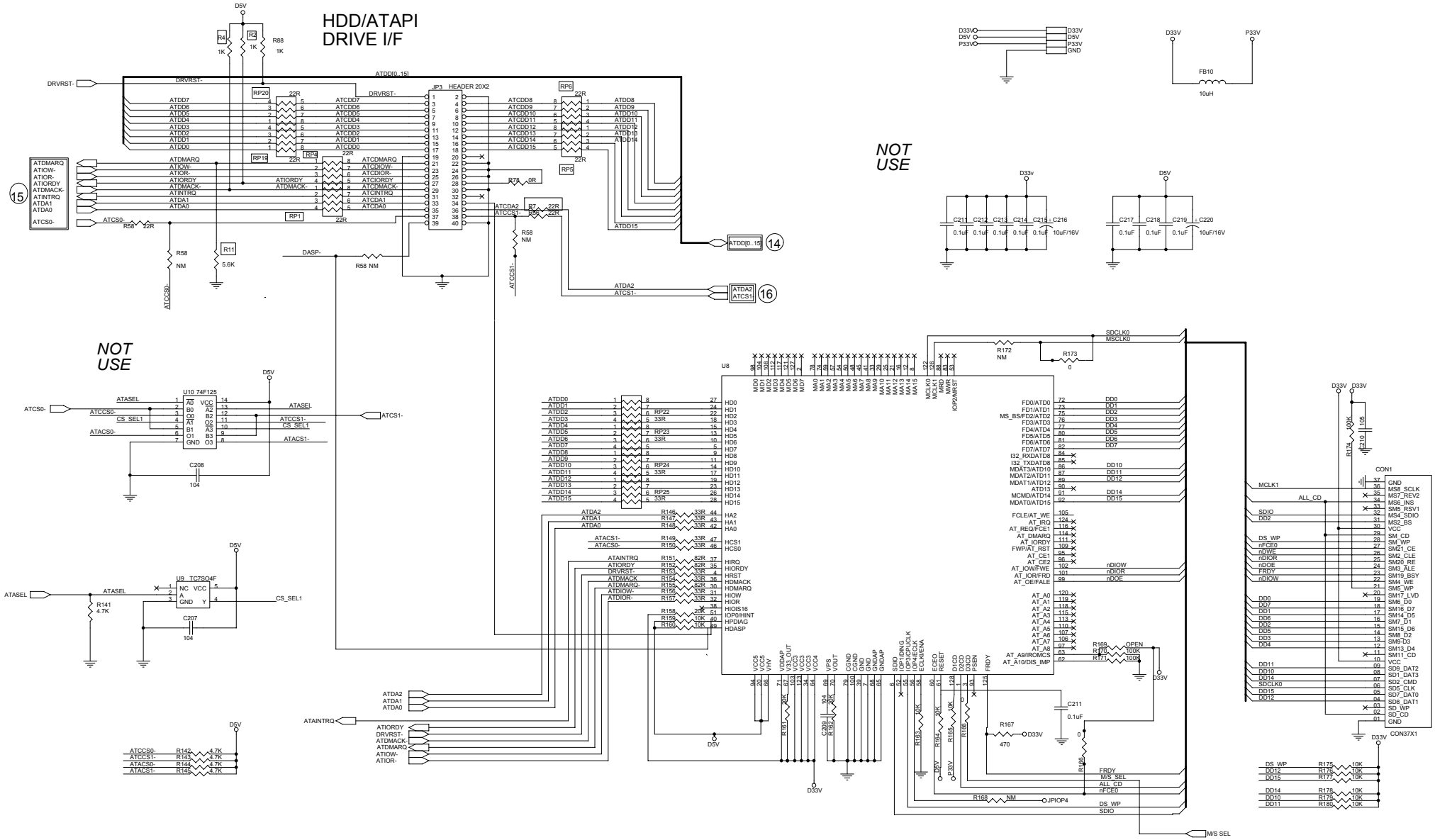

RW MAIN BOARD 2

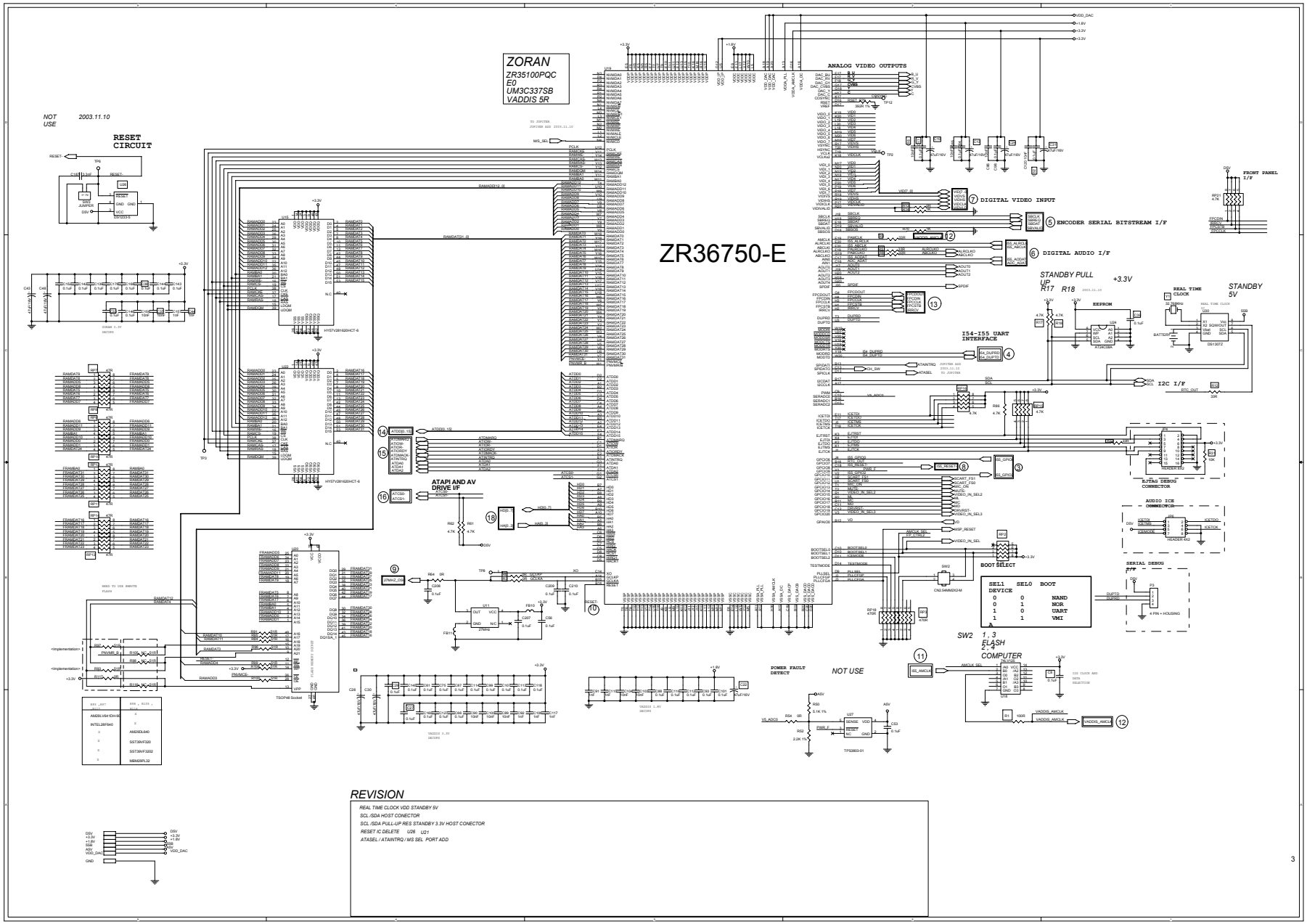

RW MAIN BOARD 3

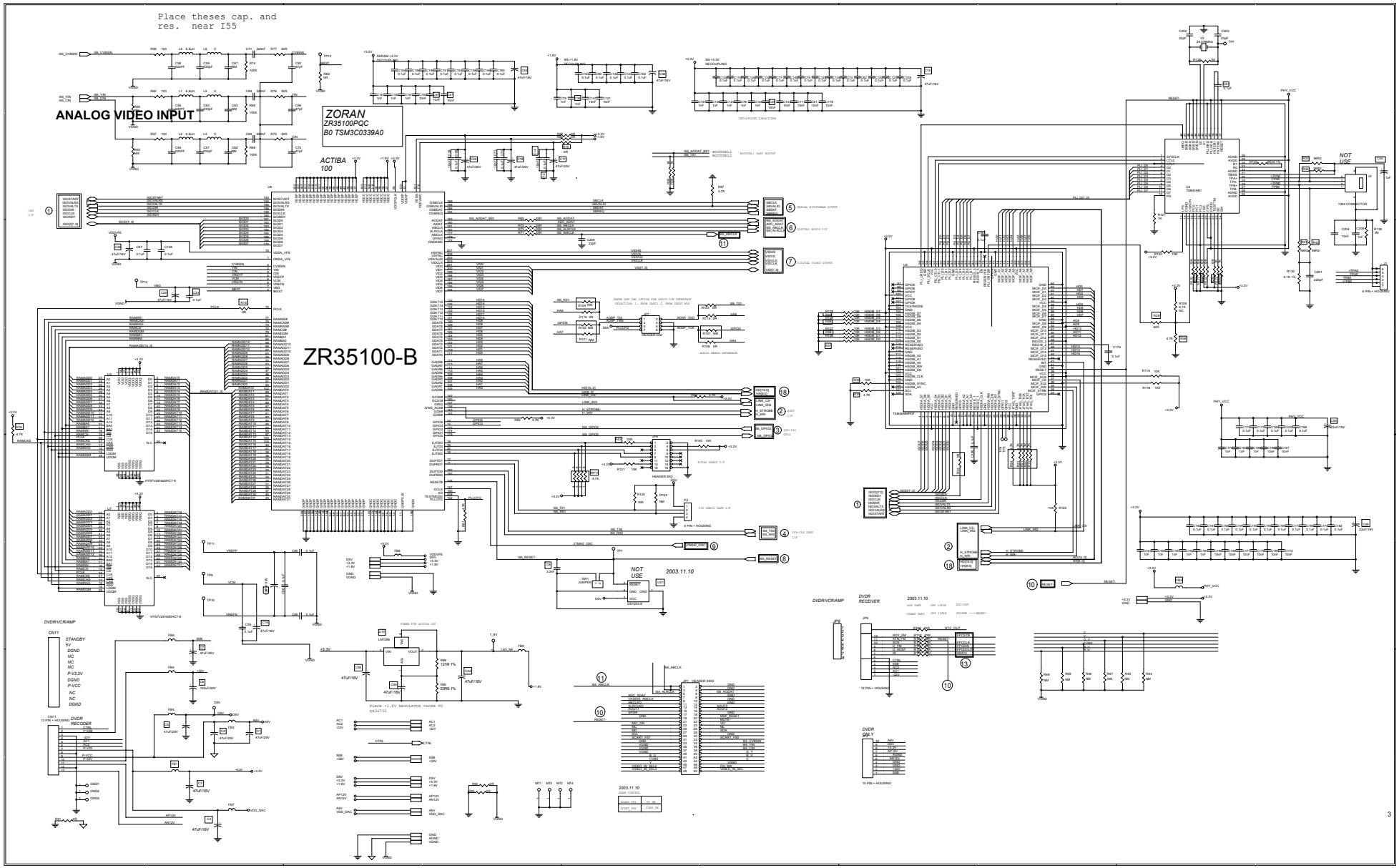

VCR BOARD

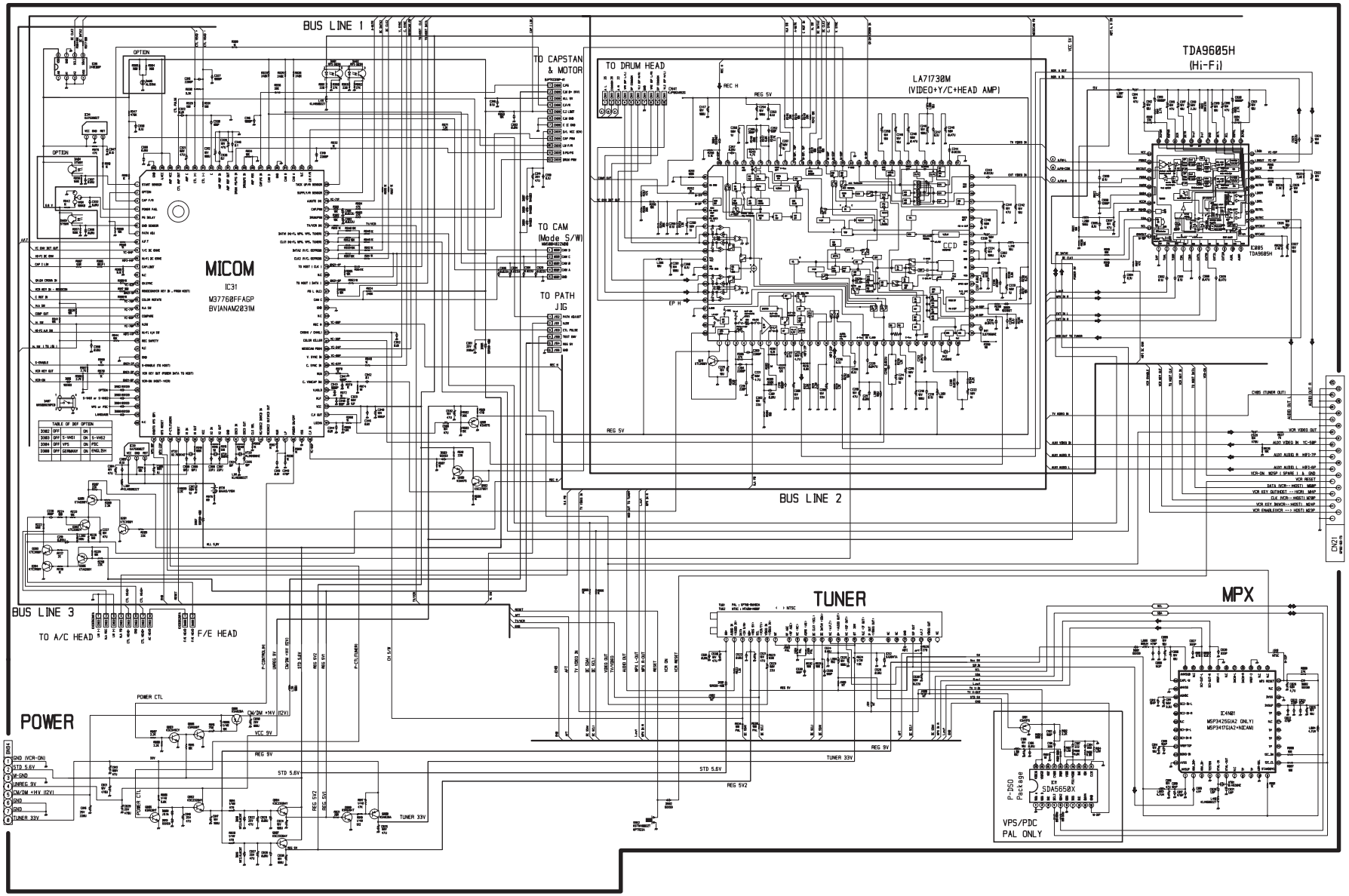
BUS LINE 1
BUS LINE 2
BUS LINE 3
MICOM
IC31
M37760FFAGP
BVIANAM203M
TO CAPSTAN & MOTOR
TO DRUM HEAD
TO CAM (Mode S/W)
TO PATH JIG
LA71730M
(VIDEO+Y/C+HEAD AMP)
TDA9605H
(Hi-Fi)
TUNER
MPX
POWER
TO A/C HEAD
F/E HEAD
SDA5650X
P-DSO Package
VPS/PDC
PAL ONLY
TABLE OF DEF OPTION

PRINTED CIRCUIT BOARDS
FRONT BOARD

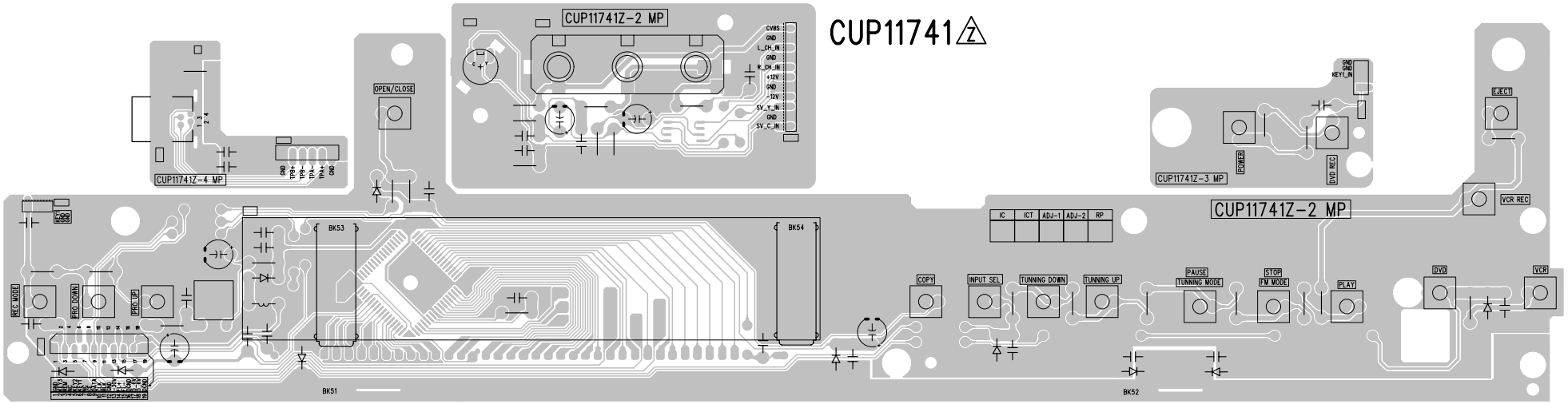

FUNCTION BOARD

TOP VIEW

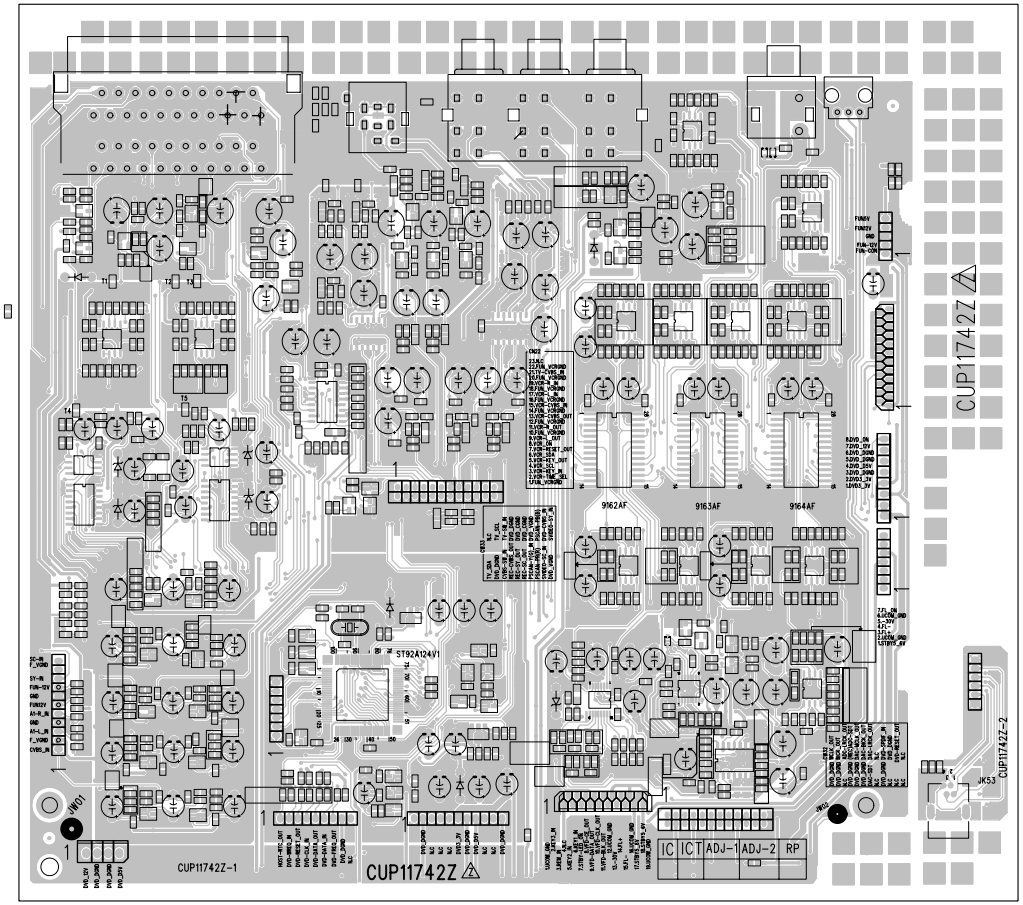

BOTTOM VIEW

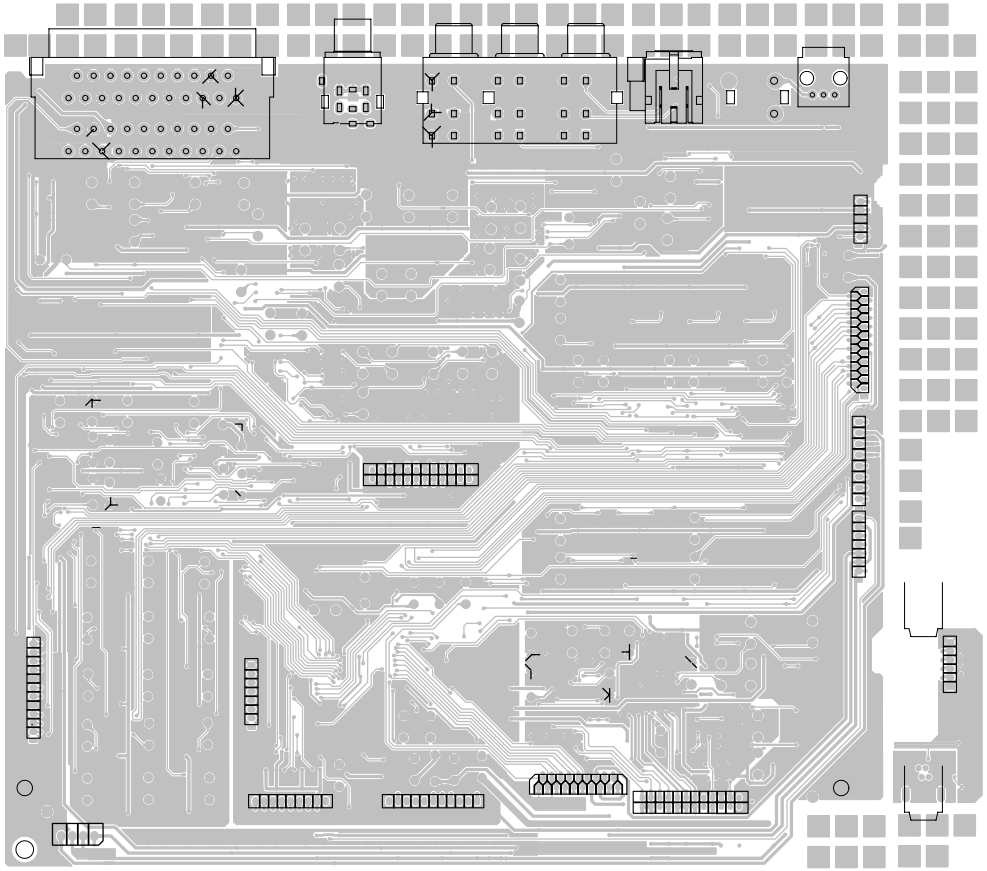

RW MAIN BOARD

TOP VIEW

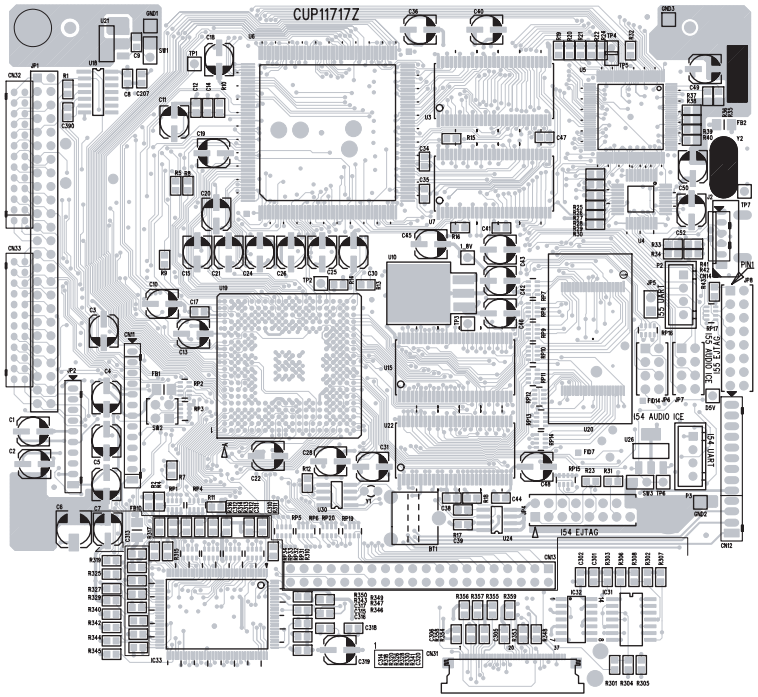

BOTTOM VIEW

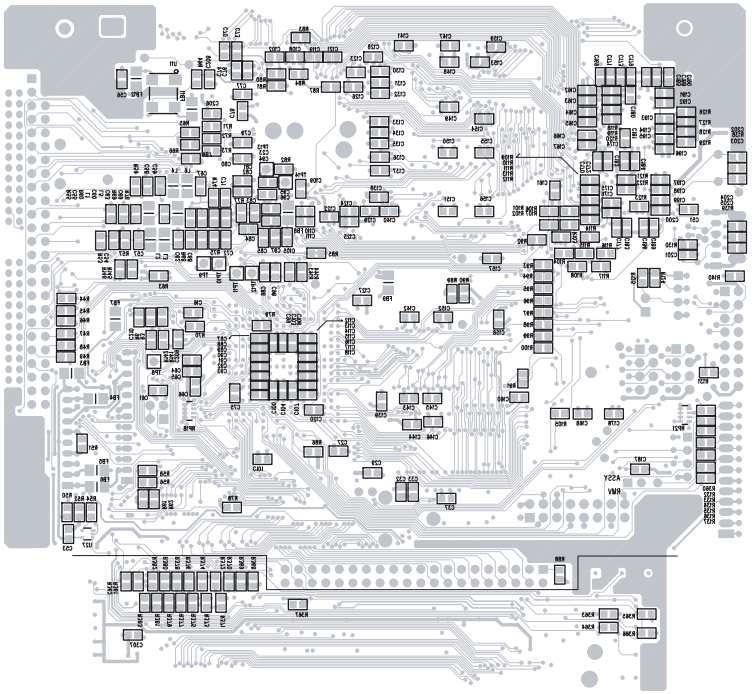

POWER BOARD

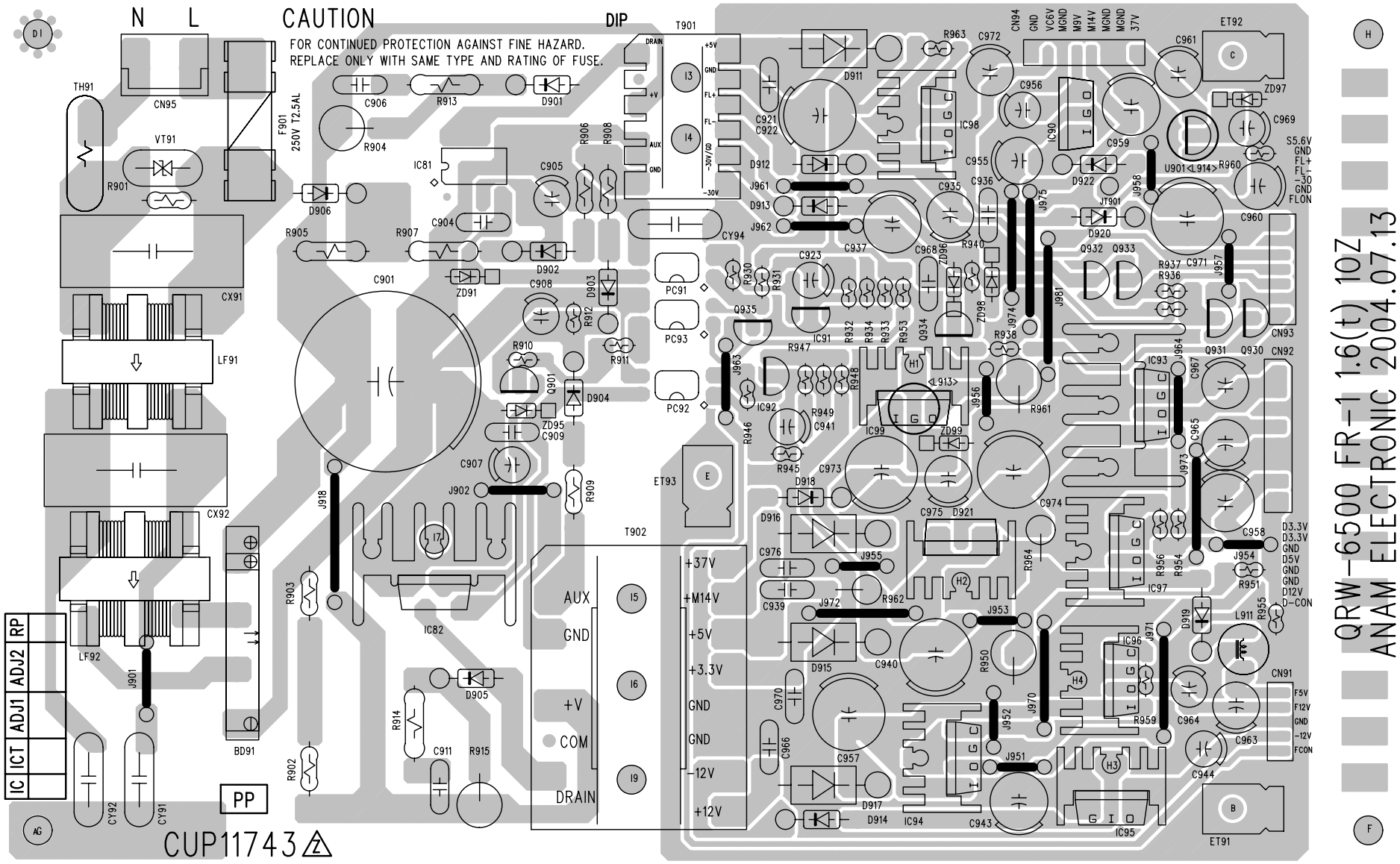
CAUTION
FOR CONTINUED PROTECTION AGAINST FINE HAZARD.
REPLACE ONLY WITH SAME TYPE AND RATING OF FUSE.
N L
DIP
T901
T902
F901
250V T2.5AL
TH91
VT91
CN95
CX91
CX92
LF91
LF92
BD91
PP
CUP11743
IC
ICT
ADJ1
ADJ2
RP
AUX
GND
+V
COM
DRAIN
+37V
+M14V
+5V
+3.3V
GND
GND
-12V
+12V
ET91
ET92
ET93
CN91
CN92
CN93
CN94
S5.6V
GND
FL+
FL-
-30
GND
FLON
D3.3V
D3.3V
GND
D5V
GND
GND
D12V
D-CON
F5V
F12V
GND
-12V
FCON
QRW-6500 FR-1 1.6(t) 10Z
ANAM ELECTRONIC 2004.07.13

VCR MAIN BOARD

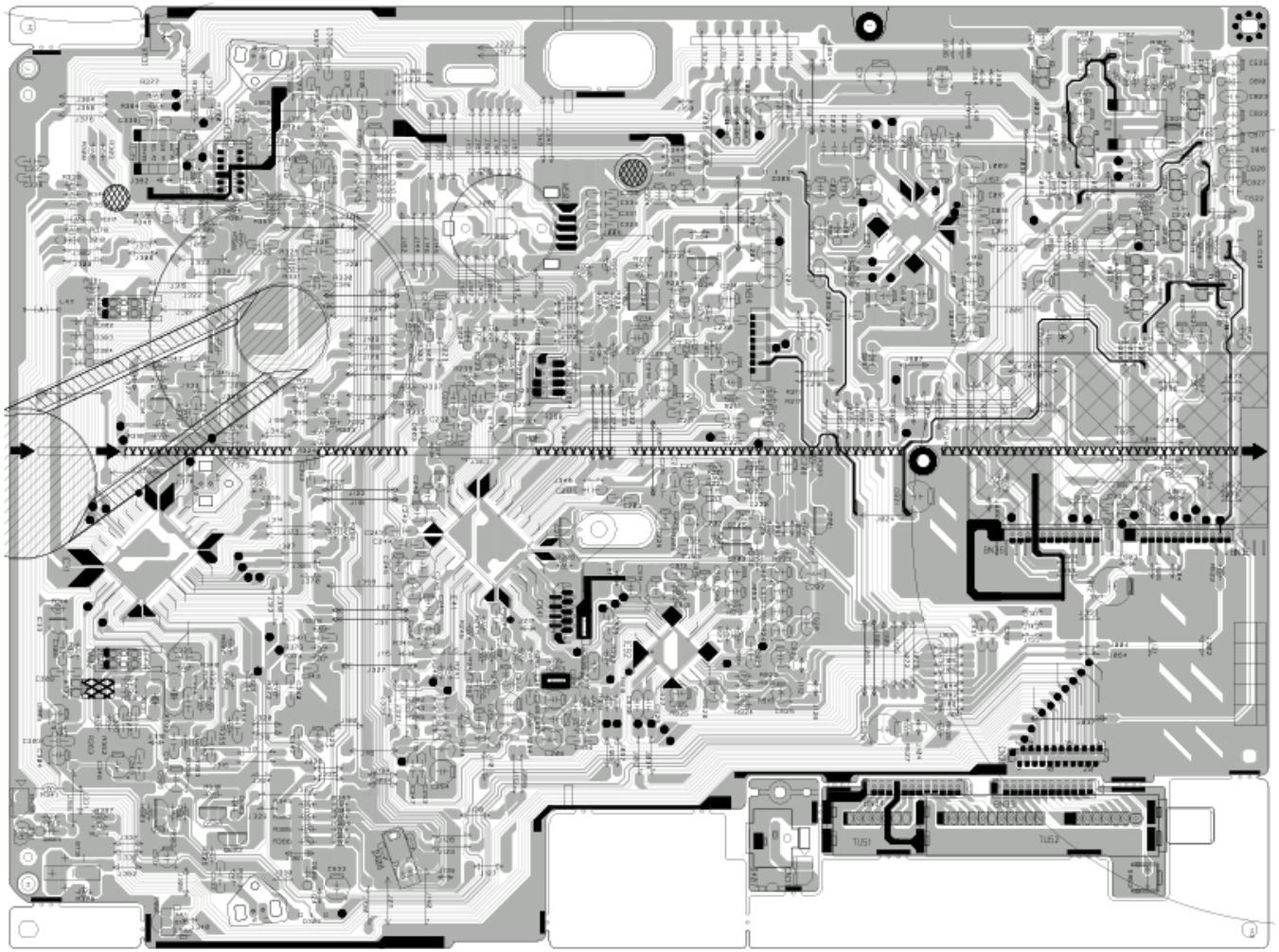

TU51
TU52
BN33
BN34
BN36